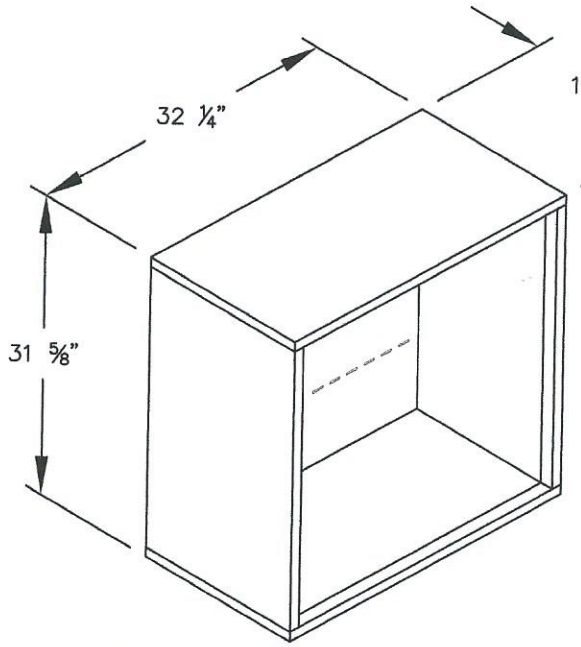

MODEL #3808D

4C HORIZONTAL MAILBOX ENCLOSURE – SURFACE MOUNTED
FOR DOUBLE COLUMN 8 DOOR HIGH UNITS

WWW.USABUILDINGSUPPLIES.COM